Build up your trust

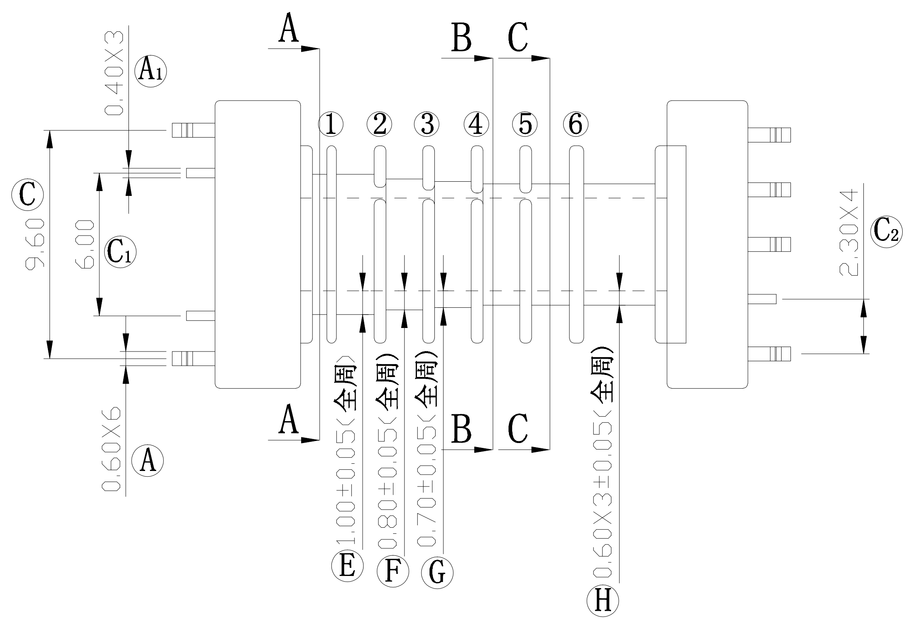

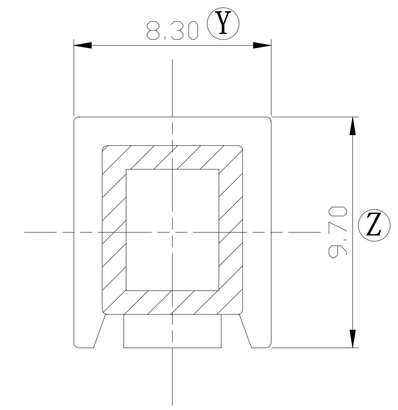

A-A 葉片:1

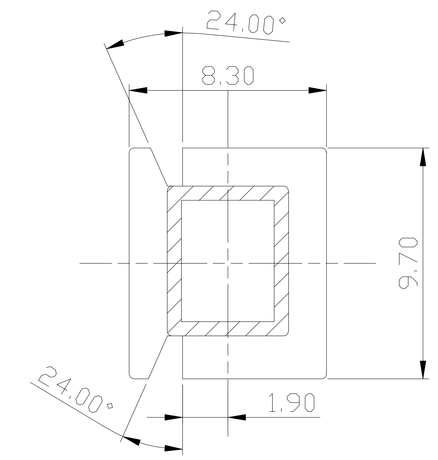

B-B 葉片:2.3.4.5

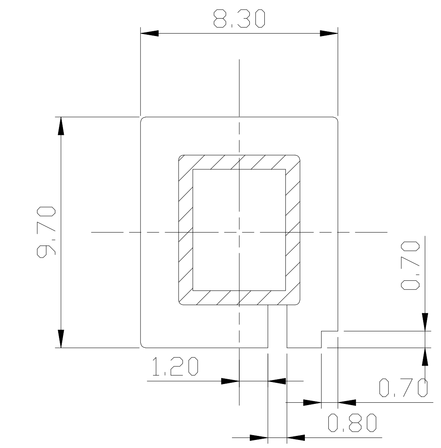

C-C 葉片:6

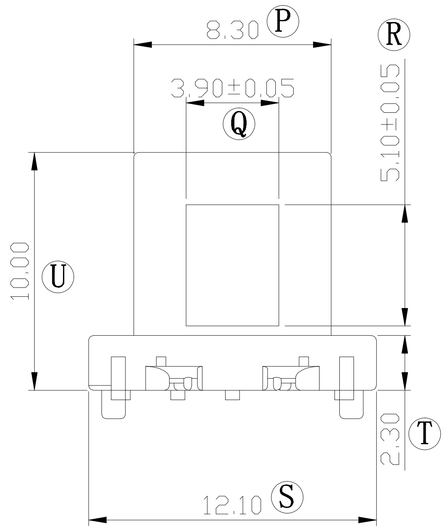

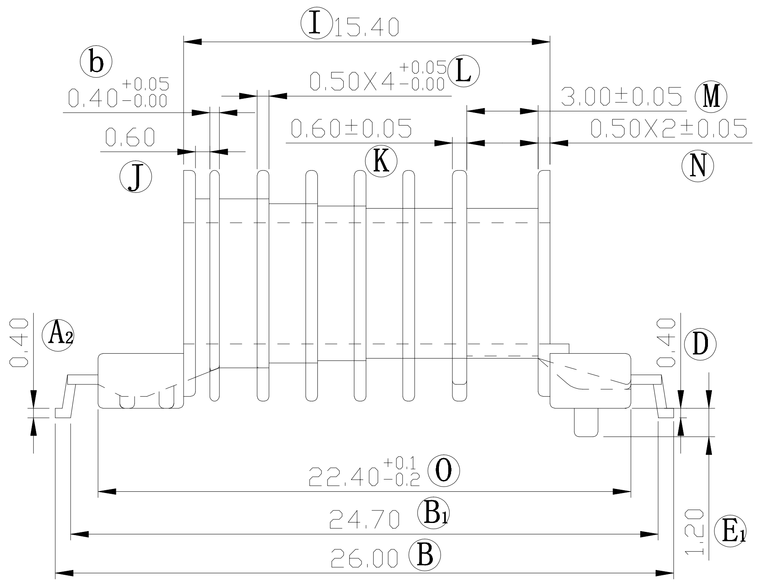

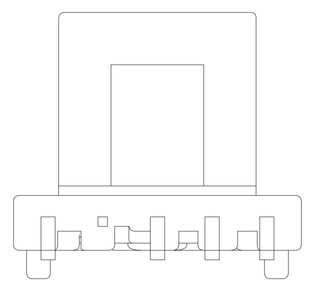

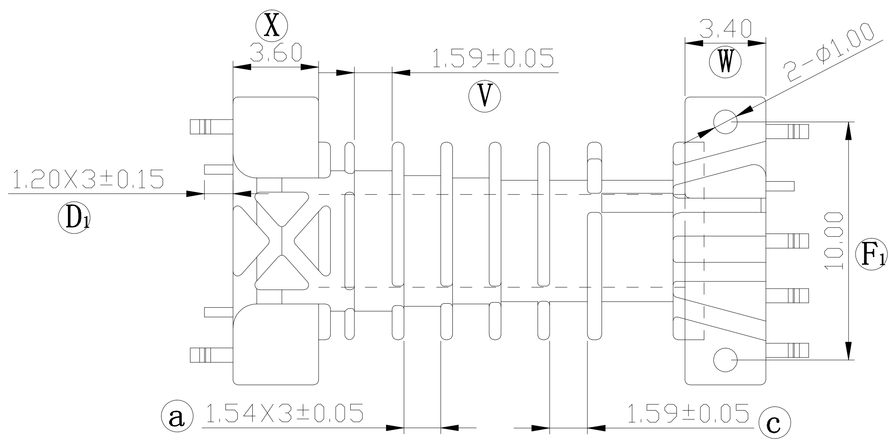

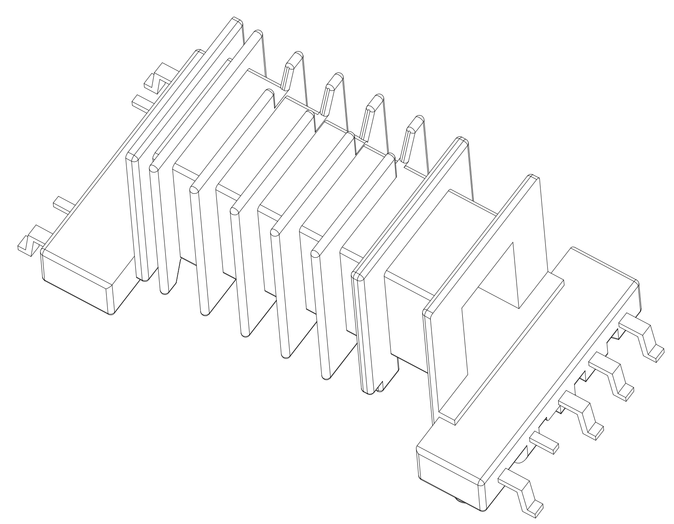

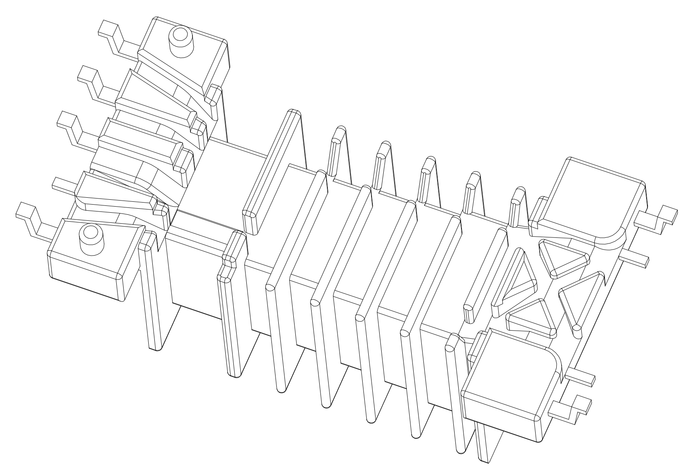

TITLE: SMD EEL-13	TOLERANCES		BOBBIN MATERIAL: LCP E4008(BK)	UL REC. UL 94V-0
DRAWING NO: GS-S1305-1	±0.1 MM	PIN PITCH ±0.1	PIN MATERIAL: PHLSPHOR BRONZE	PIN TENSION LOAD: 1.5kg MIN
GEMSTONE 建信電子制品有限公司 GEMSTONE ELECTRONIC PRODUCTS CO.,LTD.	UNIT: MM	SCALE: 2/1	ANGLE: ±1° / DATE: 2007/01/07	REV: A4
ADD:廣東省東莞市石排鎮石崇大道 TEL:(0769)86514918,86514919 FAX:86514878	DRAWED: Wang Ren Jun		CHECK: XU ZHAN	APPROVED:

REV.	PORTION.	BEFORE REV.	AFTER REV.